JOURNAL OF Materials CHEMISTRY

Charge transfer, proton transfer and clathrate compounds of dihydrotetracyanodiphenoquinodimethane (H_2TCNDQ) having highly acidic protons†

Kazukuni Nishimura,* Salavat S. Khasanov‡ and Gunzi Saito*

Division of Chemistry, Graduate School of Science, Kyoto University, Sakyo-ku, Kyoto, Japan 606-8502. E-mail: nishimura@kuchem.kyoto-u.ac.jp; saito@kuchem.kyoto-u.ac.jp

Received 18th October 2001, Accepted 14th March 2002
First published as an Advance Article on the web 15th April 2002

Dihydrotetracyanodiphenoquinodimethane (H_2TCNDQ) is a multifunctional molecule capable of behaving both as a weak electron acceptor ($E^1_{1/2} = -1.50$ V, *vs.* SCE, in CH_3CN) and a dibasic Brönsted acid ($pK_{a1} = 4.92$, $pK_{a2} = 6.46$ in ethanol–water (3 : 1)). H_2TCNDQ affords three kinds of molecular compounds depending on the predominant intermolecular interactions; namely, 1) proton transfer (PT) complexes with amines of strong basicity ($pK_a > 4.7$), 2) neutral clathrate complexes with amines of weak basicity ($pK_a < 4.7$) or donors containing a TTF system without any charge transfer (CT) and PT interactions and 3) anion radical salts with amines of intermediate basicity. The last is derived from the PT complexes containing dianion $TCNDQ^{2-}$, which can be oxidized to monoanion radical $TCNDQ^{-\bullet}$ by air. In the neutral clathrate complexes, C–H···X (X = N, O, π) hydrogen bonds with the dicyanomethyl proton of H_2TCNDQ play an important role, and construct a self-assembled structure.

1 Introduction

7,7,8,8-Tetracyano-*p*-quinodimethane (TCNQ; compounds in the text are depicted in Fig. 1) and its derivatives have attracted great interest as electron acceptor molecules in the field of organic conductors of the charge transfer (CT) type. To extend the π-electron system of TCNQ in order to reduce on-site Coulomb repulsive interactions, the preparation of tetracyanodiphenoquinodimethane (TCNDQ)§ has been attempted without any success and only polymeric material was formed.[1] Although neutral TCNDQ has not yet been isolated, the EPR and UV–Vis–NIR absorption spectra and electric conductivity of the stable monoanion of TCNDQ have been reported.[2,3] Among TCNDQ analogues, only the thiadiazole substituted TCNDQs[4] and bithiazole TCNDQ analogues[5] were synthesized as neutral forms, and octafluoro-TCNDQ was obtained only as a dianion form.[6] Among extended π-system derivatives of TCNQ containing the TCNDQ skeleton, 13,13,14,14-tetracyano-4,5,9,10-tetrahydropyrene-2,7-quinodimethane (TCNTP)[7] and 13,13,14,14-tetracyanopyrene-2,7-quinodimethane (TCNP)[8] were synthesized in the neutral form, and tetracyanopyrimido[4,5,6-*gh*]perimidinequinone (TCQQ)[9] was obtained only as a dianion form.

Here we report the structure and physical properties of dihydrotetracyanodiphenoquinodimethane (H_2TCNDQ; α,α′-dicyanobiphenyl-4,4′-diacetonitrile), which is the precursor of TCNDQ. Having two dicyanomethyl groups in a molecule, H_2TCNDQ is expected to have both electron acceptor and proton donor abilities, which provide CT complexes and proton transfer (PT) ones. The hydrogen atoms of the dicyanomethyl groups of an H_2TCNDQ molecule are expected to provide intermolecular hydrogen bonds, which construct a novel molecular arrangement in the CT and PT complexes of H_2TCNDQ. With this in mind, we have prepared the H_2TCNDQ complexes not only with TTF series donors but also with aromatic amines, which would act as electron donors as well as proton acceptors, and we discuss the physical properties and structures of these complexes.

2 Experimental

2.1 Preparation of H_2TCNDQ and its complexes

H_2TCNDQ was prepared from 4,4′-diiodobiphenyl according to the method by Uno *et. al.*[10] The crude product was purified by Soxhlet extraction with benzene then recrystallized from benzene to give a white–gray powder (yield 46.1%, mp 180–182 °C (dec.). lit.:[2] 172–179 °C, IR(KBr) 2876 ($(NC)_2C$–H), 2263 (C≡N) cm^{-1}, ^1H NMR($CDCl_3$) δ 5.14 (s, 2H), 7.68 (q, 8H), lit.: δ 5.1 (s, 2H), 7.6 (s, 8H)). A small amount of single crystals for crystal structure analysis was obtainable by gradient sublimation, however most of the H_2TCNDQ was decomposed on heating.

The H_2TCNDQ complexes were prepared by gradual concentration of directly mixed solutions of H_2TCNDQ and opponent molecules dissolved separately in an appropriate solvent (benzene, ethanol or pyridine), and their characteristics are summarized in Table 1.

2.2 Measurement

Melting points were not corrected. Cyclic voltammetry was performed in 0.1 mol L^{-1} solutions of tetrabutylammonium tetrafluoroborate (TBA·BF_4) in CH_3CN with Pt electrodes *vs.* SCE at a scan speed of 100 mV s^{-1} on an ALS/chi Electrochemical Analyzer Model 650A at 20–22 °C. Optical measurements were carried out with a KBr disk on a Perkin-Elmer Paragon 1000 spectrometer for the IR and NIR regions (400–7800 cm^{-1}) and on a Shimadzu UV-3100 spectrometer for the NIR, Vis and UV region (3800–42000 cm^{-1}). A

†Electronic supplementary information (ESI) available: elemental analysis results for H_2TCNDQ complexes. See http://www.rsc.org/suppdata/jm/b1/b109503j/

‡*Present address*: Institute of Solid State Physics RAS, 142432 Chernogolovka, Moscow District, Russian Federation.

§The IUPAC name for tetracyanodiphenoquinodimethane is tetracyanobiphenylquinodimethane.

This journal is © The Royal Society of Chemistry 2002

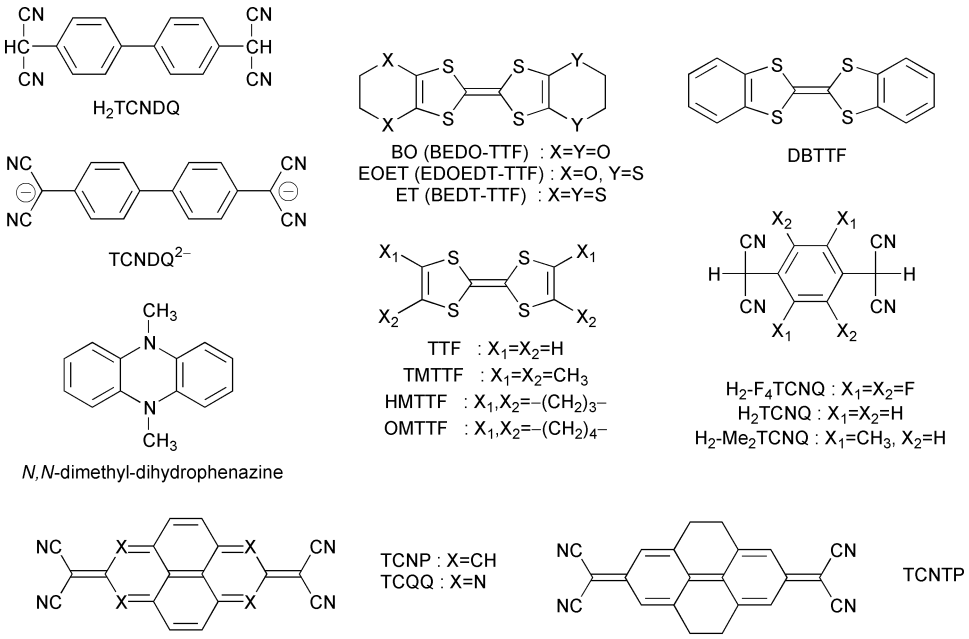

Fig. 1 Chemical structures of molecules in the text.

HORIBA 9620–10D glass electrode was used for pH measurements. The stoichiometries of the complexes were determined based on crystal structure analysis and/or elemental analysis (C, H, N, O, halogens) as given in the supplementary table.†

The intensity data of the structural analysis were collected on an automatic four circle diffractometer (MAC Science MXC$^{\chi}$) or oscillator type X-ray imaging plate (MAC Science DIP-2020K) with monochromated MoKα radiation at room temperature. The structures were solved by direct methods using SHELXS-86, 97 or SIR 92 programs.[11] The refinements of structures were performed by full matrix least squares methods (CRYSTAN 6.3 or SHELXL-97).[11] The parameters were refined adopting anisotropic temperature factors for non-hydrogen atoms and isotropic ones for hydrogen atoms. The positions of hydrogen atoms were calculated by assuming a C–H bond length of 0.96 Å and sp^3 or sp^2 conformation of the carbon atoms, except for **1** and **3**, in which the positions of the hydrogen atoms were determined by D-synthesis and the coordinates were refined. The temperature factors of the hydrogen atoms were refined isotropically. The crystal data of the compounds in the text are shown in Table 2. The overlap integral calculation was performed by the extended Hückel method and single ζ-parameter including d-orbitals of sulfur atoms.[12] Dc conductivities were measured based on a standard two-probe technique attaching gold wires (25 μm diameter) on compressed pellet samples by gold paste (Tokuriki 8560-1A). EPR measurements were performed on a continuous wave X band EPR spectrometer (JEOL JES-TE200).

3 Results and discussion

3.1 Structure and electron accepting and proton donating ability of H_2TCNDQ

H_2TCNDQ crystallizes in the monoclinic system. The dihedral angle between two phenyl rings is 25°, and there are two kinds of intermolecular short C–H···N≡C contacts, which are shorter than the sum of the van der Waals (vdW) radii of hydrogen and nitrogen atoms (2.75 Å). Two kinds of C–H···N≡C contacts are found, of which one (contact A: dashed lines in Fig. 2a) is extended perpendicular to the molecular plane and the other (contact B: dotted lines in Figs. 2b and 2c) is extended to the long axis of the H_2TCNDQ molecule. The distances and angles of these hydrogen bonds are summarized in Table 3. The contacts A form a zigzag network along the direction of ***c***. The hatched areas in Figs. 2b and 2c also indicate these zigzag networks. The contacts B form a two-dimensional network in the direction of *b* and ***a*** + 2***c***. Therefore, the three-dimensional weak hydrogen bond network is formed in the whole H_2TCNDQ crystal. This type of short C–H···N≡C contacts has been reported in benzene-*p*-dicarbonitrile,[13] 3-cyano- or 4-cyano-cinnamic acid[14] and 1,3,5-tricyanobenzene,[15] with H···N distances in the range from 2.45 Å to 2.58 Å. The details of the C–H···N≡C hydrogen bond will be discussed in section 3.2.

In the cyclic voltammetry measurement in an aprotic solvent, there is only one irreversible reduction process of $E^1{}_{1/2}$ = −1.50 V, which is much lower than those of conventional weak electron acceptors under the same measuring conditions such as C_{60} ($E^1{}_{1/2}$ = −0.44 V) or *p*-benzoquinone ($E^1{}_{1/2}$ = −0.48 V), indicating the very weak electron accepting ability of H_2TCNDQ. The linear relationships between the CT transition energy ($h\nu_{CT}$(D·A)) and the difference of the redox potential ($\Delta E^1{}_{1/2} = E^1{}_{1/2}(D) - E^1{}_{1/2}(A)$) were reported in several donor–acceptor systems.[16,17] The H_2TCNDQ system with relatively strong electron donors exhibits the relation between $E^1{}_{1/2}$(D) (in V units) and $h\nu_{CT}$(D·H_2TCNDQ) in the chloroform solution (Fig. 3) as shown in eqn. (1) where γ is the correlation coefficient. The observed values of $h\nu_{CT}$(D·H_2TCNDQ) are rather higher than those of the 1,3,5-trinitrobenzene ($E^1{}_{1/2}$ = −0.55 V) system with donors shown in Fig. 3 (13.7–15.0 × 10^3 cm^{-1}), being consistent with the very weak electron accepting ability of the H_2TCNDQ molecule.

$$h\nu_{CT}(D{\cdot}H_2TCNDQ) = 31.9E^1_{1/2}(D) + 9.8\ (\gamma = 0.950 \text{ for 6 donors}) \quad (1)$$

The values of the equilibrium constant (pK_a) in the processes of $H_2TCNDQ \overset{K_1}{\rightleftarrows} H^+ + HTCNDQ^- \overset{K_2}{\rightleftarrows} 2H^+ + TCNDQ^{2-}$ in ethanol–water (3 : 1) are pK_{a1} = 4.92 and pK_{a2} = 6.46. We compare these values with those of the conventional dihydro-TCNQs. The pK_a values of some dihydro-TCNQs were previously measured not in ethanol–water (3 : 1) but in *N*,*N*-dimethylformamide (DMF)–water (7 : 3);[18] pK_{a1} = 4.01, 7.10 and 7.60, pK_{a2} = 7.20, 10.30 and 11.30 for H_2-F_4TCNQ, H_2-TCNQ and H_2-Me_2TCNQ, respectively. The adjustment of pK_a values in different solvents is achieved as follows. In two

Table 1 Solvents for complex formation, stoichiometry, appearance, IR spectra data, chemical species and classification of H_2TCNDQ complexes together with pK_a values of amines

	Opponent molecule (**X**)	pK_a		solvent[b]	Stoichiometry (**X** : TCNDQ)	Appearance	IR data					Species[d]	Group[e]
		pK_1	pK_2				Aminium band/cm^{-1}	ν_{C-H}/cm^{-1}	$\nu_{C\equiv N}/cm^{-1}$				
	TTF derivatives												
1	BO			Bz	1 : 1	Red plates		2874m	2259w			X^0,H_2Y^0	
2	EOET			Bz	1 : 1	Red plates		2870m	2256w			X^0,H_2Y^0	
3	DBTTF			Bz	2 : 1	Yellow plates		2861m	2252w			X^0,H_2Y^0	
	Amines												
4	Diaminodurene[f]	6.11[a]	2.67[a]	Bz	2 : 1	Dark yellow blocks	~3000			2176s	2128s	HX^+,Y^{2-}	A
5	*p*-Phenylenediamine	6.08	3.29	Bz	2 : 3	Yellow needles	~2900	2887m		2159s	2088s	H_2X^{2+},H_2Y^0,Y^{2-}	A
6	Pyridine	5.32		Py[c]	2 : 1	Black powder				2177s	2162s	$X,HX^+,Y^{-\bullet}$	C
7	*p*-Anisidine	5.29		Bz	2 : 1 : 0.1(Bz)	Pale orange powder	~2850		2262w	2173s	2115s	HX^+,Y^{2-}	A
8	1,10-Phenanthroline	4.86		Bz	2 : 1 : 1.1(Bz) : 1.2(H_2O)	Dark green powder	~2950			2162s	2117s	HX^+,Y^{2-}	A
9	Benzidine	4.70	3.63	Bz	3 : 2	Brown–white needles		2926m	2261m	2169m	2111m	X^0,H_2Y^0	B
10	3,3′,5,5′-TMB (3,3′,5,5′-tetramethylbenzidine)	4.49[a]	3.29[a]	Bz	1 : 2	Colorless plates		2857m	2255	2171m	2116m	X^0,H_2Y^0	B
11	*N*,*N*′-Diphenyl-*p*-phenylenediamine	1.85[a]		Bz	1 : 1	Purple–white powder		2876m	2263w			X^0,H_2Y^0	B
12	Phenazine	1.20		EtOH	1 : 1	Pale yellow needles		2868m	2260m			X^0,H_2Y^0	B
	Reference samples												
	H_2TCNDQ					White–gray powder		2876s	2263m			H_2Y^0	
	$TBA_2(TCNDQ^{2-})$					Yellow–white powder				2161s	2122s 2113s	Y^{2-}	

[a] pK_a values are calculated by pK_a calculator (Advanced Chemistry Development). [b] Bz = benzene, EtOH = ethanol, Py = pyridine. [c] Gradual concentration from pyridine solution. [d] X = opponent molecule, Y = TCNDQ. [e] A = PT complexes, B = clathrate complexes without CT and PT interactions, C = anion radical salt. [f] Durene = 1,2,4,5-tetramethylbenzene.

Table 2 The crystal data and structure refinement data of H_2TCNDQ complexes[44]CCDC reference numbers 172685–172691. See http://www.rsc.org/suppdata/jm/b1/b109503j/ for crystallographic files in .cif or other electronic format.

	H_2TCNDQ	**1** (BO) (H_2TCNDQ)	**2** (EOET) (H_2TCNDQ)	**3** $(DBTTF)_2$ (H_2TCNDQ)	**4** $(HDAD^+)_2$ ($TCNDQ^{2-}$)[a]	**10** (3,3′,5,5′-TMB) $(H_2TCNDQ)_2$	**12** (Phenazine) (H_2TCNDQ)
Formula	$C_{18}H_{10}N_4$	$C_{28}H_{18}N_4O_4S_4$	$C_{28}H_{18}N_4O_2S_6$	$C_{23}H_{13}N_2S_4$	$C_{38}H_{42}N_8$	$C_{52}H_{40}N_{10}$	$C_{30}H_{18}N_6$
Formula weight	282.30	602.74	634.82	445.64	610.80	804.94	462.50
Crystal system	Monoclinic	Triclinic	Triclinic	Triclinic	Orthorhombic	Triclinic	Triclinic
Space group	$C2/c$	$P\bar{1}$	$P\bar{1}$	$P\bar{1}$	$P2_122_1$	$P\bar{1}$	$P\bar{1}$
a/Å	25.255(5)	5.4345(7)	5.4850(5)	6.650(4)	14.208(2)	7.520(2)	7.073(1)
b/Å	7.084(1)	8.718(1)	9.056(1)	11.626(2)	16.706(2)	10.638(2)	7.338(1)
c/Å	8.260(2)	14.358(1)	14.437(2)	14.366(3)	21.054(1)	14.505(3)	12.674(3)
α/°		79.531(8)	80.614(6)	108.72(1)		111.52(1)	74.47(1)
β/°	98.64(1)	88.090(9)	87.995(6)	91.70(3)		97.68(1)	89.59(1)
γ /°		84.89(1)	84.202(6)	105.80(3)		92.77(1)	65.92(1)
V/Å^3	1461.0(5)	666.2(1)	703.8(1)	1003.7(7)	4997.4(9)	1063.9(4)	574.7(2)
Z	4	1	1	2	6	1	1
Temperature	RT	RT	RT	RT	RT	RT	RT
μ(Mo Kα)/mm^{-1}	0.069	0.384	0.521	0.493	0.074	0.077	0.082
No. of reflections used refinement	1441	2391	2668	3631	5157	3853	2147
No. of refinement parameters	108	217	181	314	625	288	163
R ($\|F_o\| > 4\sigma(\|F_o\|)$)	0.0589	0.0382	0.0593	0.0409	0.0880	0.0542	0.0568

[a]$HDAD^+$: monoprotonated diaminodurene.

different solvents (solvent I and II with their relative permittivities ε_I and ε_{II}, respectively), the change of pK_a (ΔpK_a = pK_a(II) – pK_a(I)) in the process of $HA \overset{K}{\rightleftarrows} H^+ + A^-$ at a temperature T can be described as eqn. (2),[19]

$$\Delta pK_a = 0.217(Ne^2/RT)(1/r_H + z_A{}^2/r_A - z_{HA}{}^2/r_{HA})(1/\varepsilon_{II} - 1/\varepsilon_I) \quad (2)$$

where N, r, z, e and R are the Avogadro constant, the radius and the charge of the respective chemical species, the charge of an electron and the gas constant, respectively. By using the ε values of water, ethanol–water (3 : 1) and DMF–water (7 : 3) as 78.4, 38.0 and 49.2, respectively,[20] the ΔpK_a value between ethanol–water (3 : 1) and water and that of DMF–water (7 : 3) and water are evaluated as +1.34 and +0.75, respectively, at T = 298 K assuming r_H = 1.4 Å and r_A = r_{HA} = 10 Å. Consequently, the pK_a values of H_2TCNDQ in DMF–water (7 : 3) are estimated as pK_{a1} = 4.33 and pK_{a2} = 5.87 indicating that the proton donating ability of H_2TCNDQ is much stronger than that of H_2-TCNQ and a little weaker than that of H_2-F_4TCNQ.

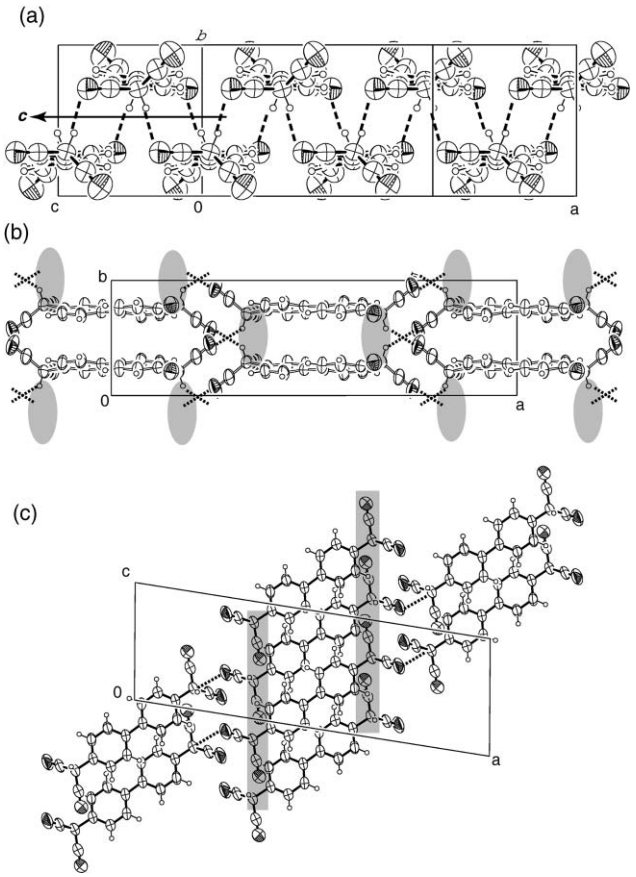

Fig. 2 Crystal structure of H_2TCNDQ The dashed and dotted lines represent contacts A and B (see text), respectively. The hatched areas indicate zigzag networks in Fig. 2a. (a) The projection along the long axis of H_2TCNDQ molecule. (b) The c-axis projection. (c) The b-axis projection.

3.2 Complexes of TTF systems

With the donors of the TTF system, three kinds of complex, namely (BO)(H_2TCNDQ) (**1**), (EOET)(H_2TCNDQ) (**2**) and $(DBTTF)_2$(H_2TCNDQ) (**3**), were obtained by gradual concentration of directly mixed solutions. However, the complexes with other donors containing TTF systems such as ET and TMTSF were not obtained, due to precipitation of each component.

The IR spectra of these complexes can be represented as the superposition of each neutral component, indicating the ground states of these complexes to be neutral. Based on eqn. (1), the values of $h\nu_{CT}$(D·H_2TCNDQ) are estimated as 23.5 × 10^3, 24.6 × 10^3 and 29.7 × 10^3 cm^{-1} for **1**, **2** and **3**, respectively. Since the expected positions of the CT bands are too high to be comparable to those of intramolecular absorption bands, the CT bands can not be observed in practice, if they exist.

3.2.1 BO and EOET complexes with C–H···X (X = O, N) contact. The crystal structure of (BO)(H_2TCNDQ) (**1**) is shown in Fig. 4. The characteristic feature is the two-dimensional hydrogen-bonded network in the *ab*-plane. Short C–H···O contacts are found between BO and H_2TCNDQ molecules as depicted by thick dotted lines. Among the H_2TCNDQ molecules short C–H···N contacts (thin dotted lines) are found, and the distances and angles of these contacts are summarized in Table 3. The C–H···O type hydrogen bonds are generally weak but significant as a directional intermolecular force.[21] It is known that most conductive BO complexes have a two-dimensional layer of BO molecules, in which short C–H···O and S···S intermolecular

Table 3 The distances and angles of hydrogen bonds in the crystals of H_2TCNDQ complexes

	Complex	Hydrogen bond type (X–H···Y–Z)	d(X···H)/Å	d(X···Y)/Å	∠(X–H···Y)/degree	Method to determine the position of hydrogen atom[e]
	H_2TCNDQ	C–H···N≡C[b]	2.58(3)	3.374(3)	138(2)	2
		C–H···N≡C[c]	2.57(3)	3.187(4)	120(2)	
1	(BO)(H_2TCNDQ)	C–H···O–C	2.55(2)	3.196(3)	128(2)	2
		C–H···N≡C	2.52(2)	3.244(4)	136(2)	
2	(EOET)(H_2TCNDQ)	C–H···O–C	2.64	3.319(4)	128	1
		C–H···N≡C	2.52	3.276(5)	136	
3	$(DBTTF)_2(H_2TCNDQ)$	C–H···π	2.61	3.55	155[d]	2
4	$(HDAD^+)_2(TCNDQ^{2-})$[a]	H_2N^+–H···NH_2–C	—	2.908(6)–2.924(7)	—	
10	(3,3′,5,5′-TMB)$(H_2TCNDQ)_2$	N–H···N≡C	2.47(2)	3.363(3)	167(2)	2
		C–H···N≡C	2.49	3.367(3)	153	1
12	(Phenazine)(H_2TCNDQ)	C–H···π	2.62	3.47	163[d]	1

[a]$HDAD^+$: monoprotonated diaminodurene. [b]"Contact A" in section 3.1. [c]"Contact B" in section 3.1. [d]The position of the Y atom is assumed as the intersecting point of the π-system least-square plane and the perpendicular line from the hydrogen atom. [e]Method 1: calculated with C–H bond length of 0.96 Å and sp^3 conformation. Method 2: determined by D-synthesis.

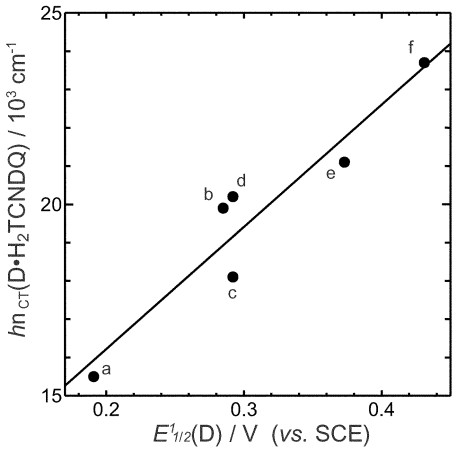

Fig. 3 CT transition energies of H_2TCNDQ complexes in chloroform solution ($h\nu_{CT}$(D·H_2TCNDQ)) *vs.* redox potentials ($E^1_{1/2}$(D)) of several strong electron donors; a: *N*,*N*-dimethyldihydrophenazine, b: TMTTF, c: OMTTF, d: HMTTF, e: TTF, f: BO. The solid line is obtained by the least squares method.

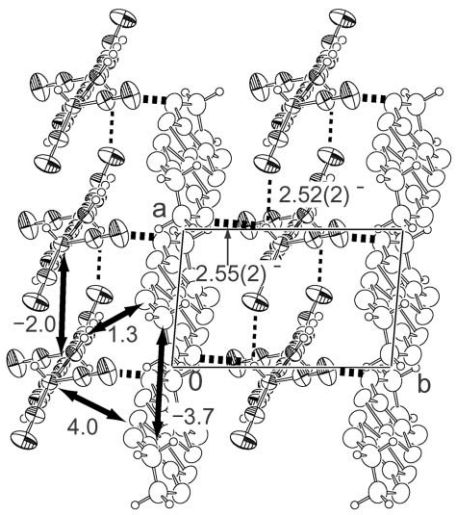

Fig. 4 The *c*-axis projection of (BO)(H_2TCNDQ) (**1**). The atoms of H_2TCNDQ molecules are shaded. The thick and thin dotted lines represent the short C–H···O and C–H···N≡C contacts, respectively. The values of intermolecular overlap integrals ($\times 10^{-3}$) are also shown.

contacts contribute to form such specific molecular packing by themselves.[17] However, no such C–H···O contact among BO molecules is observed in the H_2TCNDQ complex. Alternatively, the oxygen atoms of BO molecules have contact with the hydrogen atoms of the dicyanomethyl groups. It means that the H_2TCNDQ molecule is a better proton donor for hydrogen-bonding than BO, consistent with the strength of the carbon acidity for sterically unhindered proton donors,[22] since it is obvious that the acidity of H_2TCNDQ is much stronger than that of BO. Consequently, the C–H···N≡C short contacts among H_2TCNDQ molecules (‖*a*) and the short C–H···O contacts cause the BO molecules to form one-dimensional chains along the *a*-axis rather than two-dimensional layers.

Recently, the atomic contacts of C–H···N have been investigated and are concluded to be weak hydrogen bonds like C–H···O from the crystallographic evidence.[23] *Ab initio* calculation of the C–H···N interactions also showed that the interaction energy is comparable to that of the C–H···O hydrogen bond.[24] Therefore, the C–H···N interaction can be regarded as an analogue of the C–H···O one. As shown in Table 3, the C–H···N≡C angles of the compounds examined in this paper are in the range of 120–153°, which is similar to that of C–H···O–C hydrogen bonds with a mean angle 137° which is a considerably smaller angle than that of O–H···O bonds that prefer a linear conformation.[25] The calculated interaction energies both of $F_2HCH\cdots NH_3$ and $F_2HCH\cdots OH_2$, which are similar to the hydrogen bond of dicyanomethyl groups, were about a half of those of conventional hydrogen bonds.[24,26] Since the values of the intermolecular π-electron overlap integrals (Fig. 4) are quite small and the charge transfer degree between BO and H_2TCNDQ is almost zero, the static electronic interactions by π-electron overlap can be neglected in **1**. Therefore, the main force of crystal formation is concluded to be the intermolecular C–H···O–C and C–H···N≡C hydrogen bonds. Neglecting very weak CT interactions, **1** is classified as a neutral clathrate complex with hydrogen bonds.

The crystal structure of (EOET)(H_2TCNDQ) (**2**) is very close to that of **1**. The sulfur and oxygen atoms in the outer six-membered ring of an EOET molecule are disordered. The short C–H···O and C–H···N contacts are also observed in the same manner as those of **1**. Their distances and angles are shown in Table 3. In **2**, the EOET molecules play the same role as the BO molecules in **1**. **2** is also classified as a neutral clathrate complex with hydrogen bonds like **1**.

3.2.2 DBTTF complex with C–H···π contacts. The crystal structure of (DBTTF)(H_2TCNDQ) (**3**) is shown in Fig. 5. The DBTTF molecules are almost parallel to one another, though the H_2TCNDQ molecules are slightly inclined, and the dihedral angle between DBTTF and H_2TCNDQ molecules is 10°. The most interesting and peculiar structural point is that short C–H···π contacts are observed in **3**, and the distance between

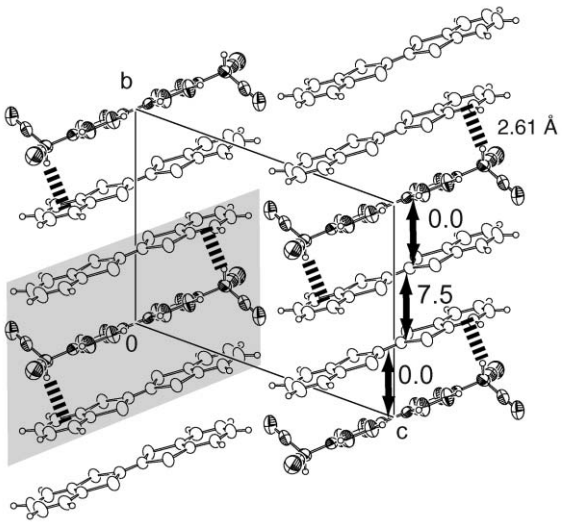

Fig. 5 The *a*-axis projection of $(DBTTF)_2(H_2TCNDQ)$ (**3**). The atoms of the H_2TCNDQ molecules are shaded. Short C–H···π contacts are indicated by dotted lines. The shaded area is the unit DBTTF··· H_2TCNDQ···DBTTF. The values of intermolecular overlap integrals ($\times 10^{-3}$) are also shown.

the hydrogen atoms and the π-plane is 2.61 Å as depicted by dotted lines in Fig. 5. The intermolecular C–H···π interaction has been discussed from the viewpoint of molecular recognition.[27] Based on the crystallographic database study of C–H···π contacts,[28] the mean distance between hydrogen atoms and π-plane is 2.65 Å in the case of Cl_2HCH···π, which is a structural analogue of H_2TCNDQ. *Ab initio* calculations have been carried out to evaluate the interactions between hydrocarbons and benzene,[29] and the C–H···π interaction was proved to be attractive but considerably weaker than that of O–H···O. The major source of the C–H···π attraction is dispersion interaction, while the electrostatic interaction contributes to this attraction in the case of acidic protons, such as in acetylene. It is, therefore, anticipated that the strong proton donating ability of the H_2TCNDQ molecule affords crystal cohesion. In this crystal, the C–H···π contacts contribute to the cohesion since one H_2TCNDQ molecule is bonded by a C–H···π contact to the two neighboring DBTTF molecules to form a repeating unit: DBTTF··· H_2TCNDQ···DBTTF (shaded area in Fig. 5). Similarly to **1**, **3** is classified as a neutral clathrate complex considering none of the intermolecular π-electron overlap integrals between H_2TCNDQ and DBTTF molecules (Fig. 5).

3.3 Complexes of aromatic amine systems

With aromatic amines, 9 kinds of complexes, which are listed in Table 1 (**4–12**) according to the basicity of the amines, were obtained by gradual concentration of directly mixed solutions, with the exception of the pyridine (**6**) complex (see the footnote to Table 1). The pK_a values of amines taken from ref. 30 are used as the acid dissociation constants of protonated amines. These complexes can be classified into three categories (groups A, B and C in the last column of Table 1) based on the IR and UV–Vis spectra.

3.3.1 Group A: proton transfer (PT) complexes with amines. Strong bases in Table 1 afforded proton transferred ionic salts containing protonated amines and deprotonated dianion $TCNDQ^{2-}$. The complex of *p*-phenylenediamine (**5**) contains neutral H_2TCNDQ in addition. In Fig. 6 the IR spectrum of the diaminodurene complex (durene = 1,2,4,5-tetramethylbenzene) (**4**, curve c), as an example, is compared with those of neutral H_2TCNDQ (curve a), $(TBA^+)_2TCNDQ^{2-}$ (curve b) and neutral diaminodurene (curve d) in KBr. The C≡N

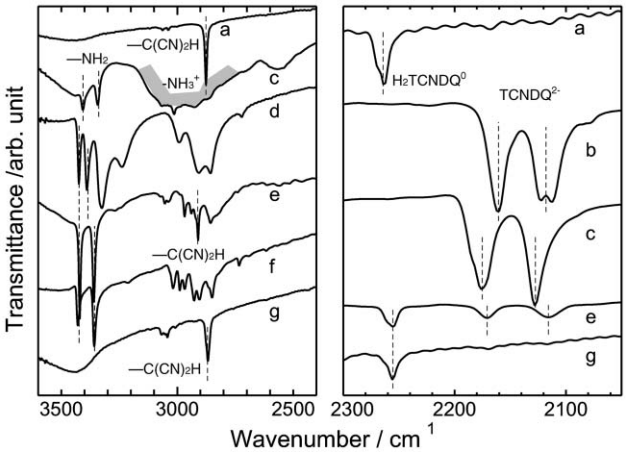

Fig. 6 IR spectra in KBr of c) diaminodurene (**4**), e) 3,3′,5,5′-tetramethylbenzidine (**10**) and g) phenazine (**12**) complexes of H_2TCNDQ are compared with those of a) neutral H_2TCNDQ, b) $(TBA)_2(TCNDQ^{2-})$, d) neutral diaminodurene, f) neutral 3,3′,5,5′-tetramethylbenzidine.

stretching modes (Fig. 6, right) of **4** are similar to those of dianion salt $(TBA^+)_2TCNDQ^{2-}$, and the C≡N stretching at 2263 cm^{-1} observed in neutral H_2TCNDQ is missing. The dicyanomethyl C–H stretching mode (Fig. 6, left) at 2876 cm^{-1} disappeared in **4**. Consequently it is concluded that the H_2TCNDQ molecules in **4** are changed to the dianion $TCNDQ^{2-}$ by losing two protons. The broad band around 3000 cm^{-1} and sharp peaks at around 3400 cm^{-1} are also observed in **4**, and are assigned to the absorptions of ammonium and free amino groups, respectively. Therefore, the formula of **4** is represented as either $(H_2N–\phi–NH_3^+)_2$-$(TCNDQ^{2-})$ or $(H_3N^+–\phi–NH_3^+)$ $(H_2N–\phi–NH_2)$ $(TCNDQ^{2-})$, where ϕ corresponds to the aromatic moiety, and the following structural analysis showed that the former is the real formula.

The crystal structure of **4** is presented in Fig. 7.[31] The diaminodurene or $TCNDQ^{2-}$ molecules form two-dimensional segregated sheets along the *bc*-plane, which are alternately piled on top of each other along the *a*-axis (Fig. 7a). The monoprotonated diaminodurene molecules form hydrogen bond chains by themselves along the *c*-axis (Fig. 7b), of which the distances between nitrogen atoms are 2.91–2.92 Å and are consistent with those of N–H···N type hydrogen bonds. This hydrogen bond chain is very similar to those of dabco·X (dabco = 1,4-diazabicyclo[2.2.2]octane, X = $HClO_4$, HBF_4),[32] which undergoes ferroelectric phase transitions.[33] In Fig. 7c, two independent $TCNDQ^{2-}$ molecules are represented, of which the dihedral angles between the benzene rings are 19° and 12°, respectively. Contrary to the neutral H_2TCNDQ molecule, the dicyanomethyl groups are in the same plane as the benzene ring, and the distances of each atom to the least square plane are within 0.10 Å. The flat structure of the dicyanomethyl groups agrees with the change from sp^3 to sp^2 conformation by losing acidic dicyanomethyl protons.

With *p*-anisidine (**7**) and 1,10-phenanthroline (**8**), 2 : 1 complexes were obtained and these complexes consist of monoprotonated amine cation molecules and $TCNDQ^{2-}$ dianions based on their IR spectra, which exhibit both absorption bands of protonated amine and deprotonated dicyanomethyl groups but no free ones. The peak from the dicyanomethyl C–H vibration remains in the *p*-phenylenediamine complex (**5**, 2 : 3 stoichiometry) indicating the presence of excess H_2TCNDQ species besides diprotonated amines and dianion $TCNDQ^{2-}$. The strong optical absorption at around 25×10^{-3} cm^{-1} in KBr disks is observed in these PT complexes. This absorption is assigned to that of dianion $TCNDQ^{2-}$ based on that of $(TBA^+)_2(TCNDQ^{2-})$, consistent with the IR spectra.

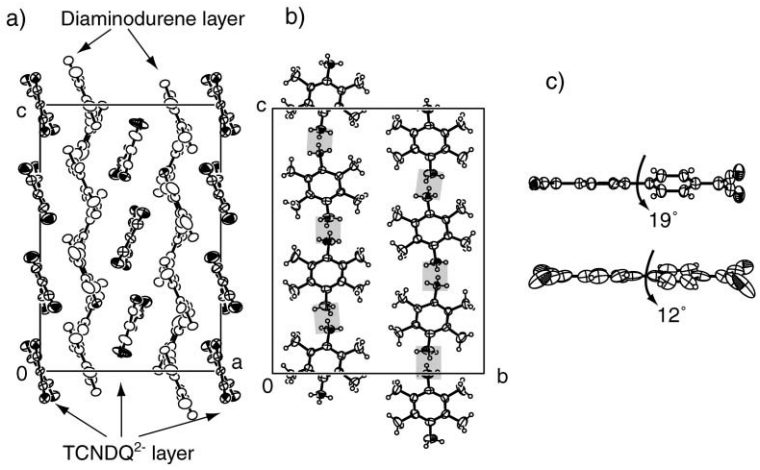

Fig. 7 Crystal structure of (monoprotonated diaminodurene)$_2$(TCNDQ^{2-}) (**4**) (a) The *b*-axis projection. The atoms of the diaminodurene molecules are shaded. (b) The diaminodurene molecule layer (*a*-axis projection). The hydrogen bonding between the nitrogen atoms is enclosed by the shaded area. (c) Two twisted TCNDQ^{2-} molecules, which are crystallographically independent of each other.

3.3.2 Group: non-PT and CT clathrate complexes with amines. Four kinds of amines with weak basicity (pK_{a1} < 4.7) afforded colorless or pale-colored complexes in which neither PT nor CT was detected between component molecules. In Fig. 6 the IR spectra of the 3,3′,5,5′-TMB (3,3′,5,5′-tetramethylbenzidine) complex (**10**, curve e), as an example, and neutral 3,3′,5,5′-TMB (curve f) in KBr are presented. The dicyanomethyl C–H stretching mode peak is clearly observed at 2857 cm^{-1} and no broad bands ascribable to the protonated 3,3′,5,5′-TMB were observed at around 3000 cm^{-1} in **10** indicating that neutral H$_2$TCNDQ and 3,3′,5,5′-TMB molecules exist in this complex. However, the observation of three peaks with almost the same intensity at 2255, 2176 and 2116 cm^{-1} simultaneously indicates the presence of TCNDQ^{2-} species. Since the peak intensity of the C≡N stretching mode of TCNDQ^{2-} is much higher than that of neutral H$_2$TCNDQ, the ratio of TCNDQ^{2-} to H$_2$TCNDQ is assumed to be quite small, therefore the main components of this complex are concluded to be neutral H$_2$TCNDQ and 3,3′,5,5′-TMB.

The crystal structure of **10** is shown in Fig. 8. Short C–H(dicyanomethyl)···N(amino) (indicated by thick dotted lines) and C≡N···H–N (indicated by thin dotted lines) contacts are found between H$_2$TCNDQ and 3,3′,5,5′-TMB molecules. For the former one, the H···N and C···N distances are 2.49 Å and 3.368(3) Å, respectively, and for the latter one, the H···N and N···N distances are 2.45(3) Å and 3.362(3) Å, respectively. The distance between nitrogen atoms for the C≡N···H–N contact in **10** is rather larger than the average one for known N···H–N contacts of 2.98 Å,[34] indicating that the hydrogen bond between the nitrogen atoms is weak. Two crystallographically independent H$_2$TCNDQ molecules exist in this crystal, which form zigzag segregated stacking along the *a*-axis to avoid the bulky dicyanomethyl groups twisting from the benzene rings. The biphenyl rings of the H$_2$TCNDQ molecules are almost parallel to each other, the dihedral angle being 5° and the interplanar distance is 3.75 Å. The 3,3′,5,5′-TMB molecules also stack along the *a*-axis, of which dihedral angles to the two kinds of H$_2$TCNDQ molecules are 74° and 70°. This

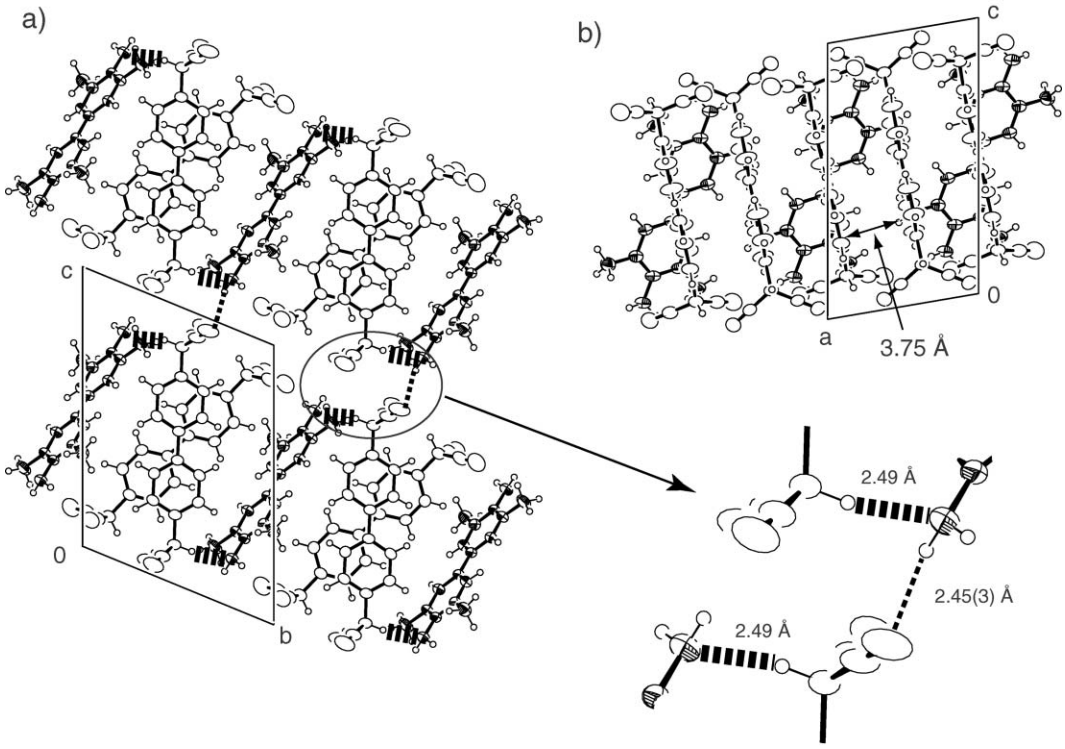

Fig. 8 Crystal structure of (3,3′,5,5′-TMB)(H$_2$TCNDQ)$_2$ (**10**). The 3,3′,5,5′-TMB molecules are shaded. (a) The *a*-axis projection. The thick dotted lines are hydrogen bonds, and expansion of circled area is drawn in the right. (b) The *b*-axis projection.

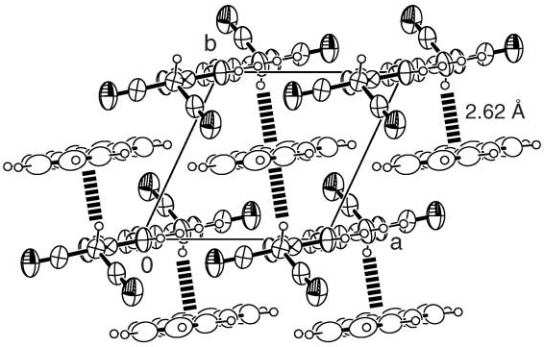

Fig. 9 The *c*-axis projection of (phenazine)(H_2TCNDQ) (**12**). The H_2TCNDQ molecules are shaded. Short C–H···π contacts are indicated by dotted lines.

structure resembles that of the clathrate complex (benzidine)(4,4′-dinitrobiphenyl)$_4$.[35] By comparison with the crystal of the diaminodurene complex (**4**), the conformation of the dicyanomethyl carbon in 3,3′,5,5′-TMB complex is sp^3, which agrees with conjecture based on the IR spectrum that the main components of this complex are neutral H_2TCNDQ and 3,3′,5,5′-TMB.

A 1 : 1 complex is afforded with phenazine (**12**), which obviously consists of neutral phenazine and H_2TCNDQ based on the IR spectrum (curve g in Fig. 6). The crystal structure of **12** is shown in Fig. 9. Short C–H···π contacts (indicated by dotted lines) of 2.61 Å between phenazine and H_2TCNDQ molecule are found, which is the same intermolecular attraction as that in (DBTTF)$_2$(H_2TCNDQ) (**3**). An alternating column is formed along the ***a***–***b*** direction, connected by the C–H···π contacts. Flat molecules having conjugated π-systems such as DBTTF and phenazine seem to be excellent hydrogen bond acceptors.

The complexes with benzidine (**9**) and *N*,*N*′-diphenyl-*p*-phenylenediamine (**11**) were found to be neutral based on their IR spectra. It is worth mentioning again that the complexes in this group are colorless or pale-colored (Table 1) suggesting that CT interactions are not involved. Based on eqn. (1), the values of $h\nu_{CT}$(D·H_2TCNDQ) are estimated as over 24 × 10^3 cm^{-1} for **9**–**12**. Actually, no optical absorption band characteristic of a CT interaction appears in KBr disk spectra for the complexes in group B, indicating that these complexes are classified as clathrate complexes without PT and CT interactions, the same as the complexes **1**–**3**.

3.3.3 Group C: radical salts with amines. Pyridine (**6**) afforded black complexes, of 2 : 1 stoichiometries. In a DMF solution of **6**, the characteristic absorption band at 542 nm of anion radical TCNDQ$^{-\bullet}$ was observed. The EPR spectra of **6** in DMF solution showed the same pattern as the characteristic hyperfine structure of TCNDQ$^{-\bullet}$.[2] The monoanion TCNDQ$^{-\bullet}$ is probably produced by air oxidation of dianion TCNDQ^{2-}, which was derived from proton transfer of H_2TCNDQ. The reported redox potential values for the process of TCNDQ$^{2-} \overset{E_1}{\rightleftarrows}$ TCNDQ$^{1-} \overset{E_2}{\rightleftarrows}$ poly-TCNDQ^0 ($E^{1/2}{}_1$ = −0.31 V and $E^{1/2}{}_2$ = −0.15 V *vs.* Ag|AgClO$_4$ in DMF)[2] indicate that the dianion TCNDQ^{2-} is easily oxidized in solution. Broad absorption bands at around 6–9 × 10^3 cm^{-1} in spectra taken on KBr disks were observed in **6**. The relatively low energy absorption band suggests the existence of segregated columns with radical anion TCNDQ$^{-\bullet}$. **6** is a poorly conductive semiconductor (σ_{RT} = 4 × 10^{-7} S cm^{-1}, E_a = 260 meV), similar to (*N*-methylphenazinium)(TCNDQ$^{-\bullet}$) and (*N*-methylquinolinium)(TCNDQ$^{-\bullet}$).[3] The chemical formula of **6** can be represented as (pyridine)(pyridinium$^+$)(TCNDQ$^{-\bullet}$) based on its stoichiometry. Oxidation of the PT complex is found in the picric acid complex of 3,3′-dibromo-*o*-tolidine,[36] where the radical cation salt of 3,3′-dibromo-*o*-tolidine is formed by air oxidation. In this case, novel complex isomerism is observed, *i.e.*, the transformation from PT salt to radical anion salt.

3.3.4 Criterion affording PT and clathrate complexes. The diagram scaled by $\Delta pK = pK_a - (14 - pK_b)$, where pK_a and pK_b are the acid dissociation constant of the proton donor and the base dissociation constant of the proton acceptor, respectively, was proposed in the organic π-molecular complexes between aniline derivatives and polynitrophenols (Fig. 10).[37] The boundary between PT and CT (or non-PT) complex lies within $-0.6 < \Delta pK < 0.5$. In the H_2TCNDQ system, as discussed in the earlier sections, the boundary exists between **8** and **9** where the pK_a of the amine, which is equal to $(14 - pK_b)$, is 4.70–4.86. The pK_a value of H_2TCNDQ in water is estimated to be 3.58 based on eqn.(2). Hence the value of ΔpK at the boundary between PT and non-PT complexes is evaluated to be −(1.12–1.28). The PT complexes (**4**, **5**, **7**, **8**) reside on the left side and the non-PT clathrate (**9**–**12**) ones on the right side of the ΔpK boundary in Fig. 10. The neutral clathrate complexes **1**, **2** and **3** are reasonably located at the right side far away from **12** since the pK_a of TTF derivatives is much smaller than that of aromatic amines. The boundary of the H_2TCNDQ complexes overwritten on the original diagram taken from ref. 37 is represented in Fig. 10. Even though the value of this boundary is slightly less than those of polynitrophenol complexes, a step-like phase boundary is clearly observed between the solid complex formation. The complex formation near the boundary is sensitive to the conditions of preparation; for example, complex isomerism is observed in the complex with *o*-dibromotolidine and picric acid, in which the neutral CT complex is obtained in chloroform solution and the cation radical salt in ethanol solution.[36] Similar complex isomerism is also expected in the H_2TCNDQ complexes.

4 Concluding remarks

The dicyanomethyl protons of the H_2TCNDQ molecule are associated with the formation of a variety of complexes. Proton transfer complexes are afforded with amines of strong basicity (pK_a > 4.7), in which the dicyanomethyl protons are transferred to the amine molecules to form aminium salts of deprotonated TCNDQ^{2-} dianions. The dianion TCNDQ^{2-} can be oxidized by oxygen and turns into anion radical

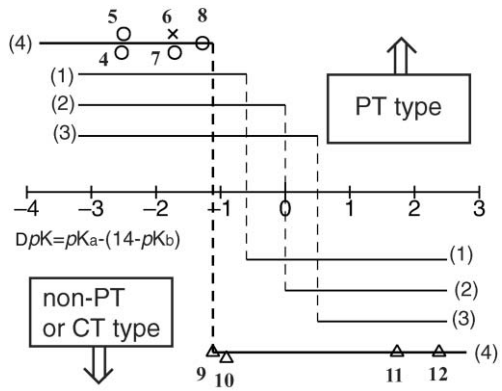

Fig. 10 The diagram of PT and CT (including non-PT clathrate) complex formation scaled by the value of $\Delta pK = pK_a - (14 - pK_b)$, where the pK_a of H_2TCNDQ in water is estimated as 3.58. (1) picric acid complexes, (2) 2,4-dinitrophenol complexes, (3) 2,6-dinitrophenol complexes and (4) H_2TCNDQ complexes. The boundary between PT and CT complexes is indicated by dashed lines. Open circles, open triangles and crosses show TCNDQ complexes classified to group A, B and C in section 3.3, respectively.

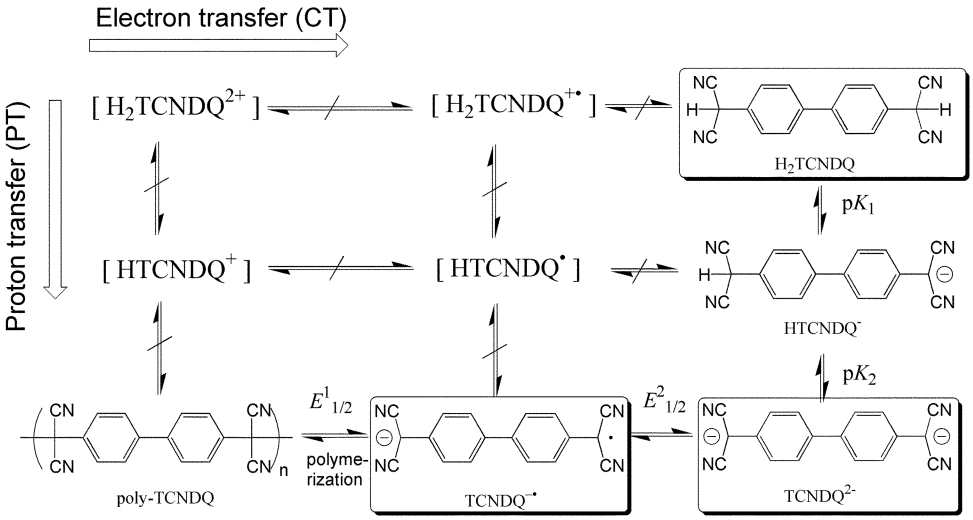

Fig. 11 3 × 3 PT–CT diagram of the H_2TCNDQ–TCNDQ system. Each vertical and horizontal line corresponds to a two step PT or CT process, respectively. The species discussed in the text are enclosed by boxes, and the species in brackets have not been observed so far.

$TCNDQ^{-\bullet}$ in the formation of the pyridinium salt. According to the results of this article and ref. 2, the transformation of chemical species in the TCNDQ system can be represented as a 3 × 3 PT and CT diagram in Fig. 11, like the quinone–hydroquinone system[38] and the 2,2′-bi-1*H*-imidazole system.[18,39] The PT–CT diagram of TCNQ was reported,[40] and this diagram was applicable to, for example, the hydride transfer in the TCNQ complexes with *N*-methylacridan derivatives, in which TCNQ turned into H_2TCNQ and $TCNQ^{-\bullet}$ *via* neutral radical $HTCNQ^{\bullet}$.[41] In this article, we have reported the complexes of H_2TCNDQ, $TCNDQ^{-\bullet}$ and $TCNDQ^{2-}$, which are enclosed by boxes in Fig. 11. The reaction of neutral amine with H_2TCNQ and TCNQ was reported, where the anion radical salts of aminium and TCNQ were obtained;[42] however, any other reactions using H_2TCNQ have not been reported, and only a few salts containing dianion $TCNQ^{2-}$ in the solid state are known so far.[43] The study of complex formation with H_2TCNDQ and $TCNDQ^{2-}$ would open up a novel chemistry of TCNQ derivatives, since only a limited number of reactions with H_2TCNQ derivatives are utilized in the formation of complexes.

Clathrate complexes are afforded with weak basic or non-basic molecules, in which the hydrogen bond of the dicyanomethyl proton plays an important role in the crystal formation. In addition to the oxygen and nitrogen atoms, the planar π-system works as a proton acceptor in C–H···X (X = N, O, π) hydrogen bonds, which gives a hint for the structure formation of novel π-system CT complexes. A large number of self-assembled structures with hydrogen bonds have been known for a long time and are a subject of supramolecular chemistry research.[44] For example, anilic acids, which work as both proton donor and electron acceptor like the H_2TCNDQ molecule, were used as novel supramolecular synthons forming either segregated or mixed stacks between donor and acceptor molecules, in which a self-assembled structure was formed by conventional hydrogen bonds between oxygen and/or nitrogen atoms.[45] The clathrate complexes with H_2TCNDQ, in which a less-common type of supramolecular synthon,[46] namely, a C–H···X hydrogen bond, is the main force of crystal formation, are different from most self-assembled structures with hydrogen bonds.

Generally, the electronic state of organic solids depends on the molecular arrangement and chemical species of each molecule. In the H_2TCNDQ–TCNDQ system, it is expected that various chemical species produced by the PT and CT interactions form novel molecular assemblies with hydrogen bonding, and this leads to the formation of novel electronic structures. Especially, the region near the boundary of Δp*K* in Fig. 10 would be interesting, where various types of transition among PT and CT interactions are expected.

Acknowledgement

This work was in part supported by a Grant-in-Aid for Scientific Research from the Ministry of Education, Science, Sports, and Culture, Japan, a fund for "Research for the Future" from the Japan Society for Promotion of Science and a fund for the International Joint Research Grant Program of the New Energy and Industrial Technology Development Organization (NEDO).

References

1 W. R. Hertler, *Chem. Abstr.*, 1965, **62**, 4145; D. J. Sandman and A. J. Garito, *J. Org. Chem.*, 1974, **39**, 1165.
2 A. W. Addison, A. S. Dalal, Y. Hoyano, S. Huizinga and L. Weiler, *Can. J. Chem.*, 1977, **55**, 4191.
3 M. Morinaga, T. Nogami and H. Mikawa, *Bull. Chem. Soc. Jpn.*, 1979, **52**, 3739.
4 T. Suzuki, T. Fukushima, T. Miyashi and T. Tsuji, *Angew. Chem., Int. Ed. Engl.*, 1997, **36**, 2495; T. Fukushima, N. Okazeri, T. Miyashi, K. Suzuki, Y. Yamashita and T. Suzuki, *Tetrahedron Lett.*, 1999, **40**, 1175.
5 K. Suzuki, M. Tomura, S. Tanaka and Y. Yamashita, *Tetrahedron Lett.*, 2000, **41**, 8359.
6 R. C. Wheland and E. L. Martin, *J. Org. Chem.*, 1975, **40**, 3101.
7 M. Maxfield, D. O. Cowan, A. N. Bloch and T. O. Poehler, *Nouv. J. Chim.*, 1979, **3**, 647.
8 M. Maxfield, A. N. Bloch and D. C. Cowan, *J. Org. Chem.*, 1985, **50**, 1789.
9 F. Wudl, M. L. Kaplan, B. K. Teo and J. Marshall, *J. Org. Chem.*, 1977, **42**, 1666.
10 M. Uno, K. Seto, M. Masuda, W. Ueda and S. Takahashi, *Tetrahedron Lett.*, 1985, **26**, 1553.
11 SHELXS-86, G. M. Sheldrick, University of Göttingen, 1986; SHELXS-97, G. M. Sheldrick, University of Göttingen, 1997; SIR92, A. Altomare, G. Cascarano, C. Giacovazzo, A. Guagliardi, M. C. Burla, G. Polidori and M. Camalli, adapted by S. Mackay for Crystan-GM, MAC Science Co. Ltd., 1995; CRYSTAN 6.3, MAC Science Co. Ltd., 1995; SHELXS-97, G. M. Sheldrick, University of Göttingen, 1997.
12 T. Mori, A. Kobayashi, Y. Sasaki, H. Kobayashi, G. Saito and H. Inokuchi, *Bull. Chem. Soc. Jpn.*, 1984, **57**, 627.
13 H. Guth, G. Heger and U. Drück, *Z. Kristallogr.*, 1982, **159**, 185.
14 M. S. K. Dhurjati, J. A. R. P. Sarma and G. R. Desiraju, *J. Chem. Soc., Chem. Commun.*, 1991, 1702.
15 D. S. Reddy, D. S. Goud, K. Panneerselvam and G. R. Desiraju, *J. Chem. Soc., Chem. Commun.*, 1993, 663.
16 G. Saito, T. Teramoto, A. Otsuka, Y. Sugita, T. Ban, M. Kusunoki

and K. Sakaguchi, *Synth. Met.*, 1994, **64**, 359; T. Senga, K. Kamoshida, L. A. Kushch, G. Saito, T. Inayoshi and I. Ono, *Mol. Cryst. Liq. Cryst.*, 1997, **296**, 97; G. Saito, S. Hirate, K. Nishimura and H. Yamochi, *J. Mater. Chem.*, 2001, **11**, 723.
17 S. Horiuchi, H. Yamochi, G. Saito, K. Sakaguchi and M. Kusunoki, *J. Am. Chem. Soc*, 1996, **118**, 8604.
18 T. Akutagawa and G. Saito, *Bull. Chem. Soc. Jpn.*, 1995, **68**, 1753.
19 H. Ohtaki, *Bull. Chem. Soc. Jpn.*, 1969, **42**, 1573; H. Ohtaki M. Tanaka and S. Funahashi, *Yoekihanno no Kagaku (the chemistry of solution reactions)*, Gakkai-Shuppan Center, Tokyo, 1977.
20 J. A. Riddick, W. B. Bunger and T. K. Sakano, *Organic solvents: physical properties and methods of purification, 4th edition*, Wiley, New York, 1986.
21 T. Steiner, *Cryst. Rev.*, 1996, **6**, 1.
22 T. Steiner, *Chem. Commun.*, 1997, 727.
23 M. Mascal, *Chem. Commun.*, 1998, 303; V. R. Thalladi, A. Gehrke and R. Boese, *New J. Chem.*, 2000, **24**, 463.
24 Y. Gu, T. Kar and S. Scheiner, *J. Mol. Struct.*, 2000, **552**, 17.
25 T. Steiner and G. R. Desiraju, *Chem. Commun.*, 1998, 891.
26 Y. Gu, T. Kar and S. Scheiner, *J. Am. Chem. Soc.*, 1999, **121**, 9411.
27 M. Nishio, Y. Umezawa, M. Hirota and Y. Takeuchi, *Tetrahedron*, 1995, **51**, 8665.
28 Y. Umezawa, S. Tsuboyama, K. Honda, J. Uzawa and M. Nishio, *Bull. Chem. Soc. Jpn.*, 1998, **71**, 1207.
29 S. Tsuzuki, K. Honda, T. Uchimaru, M. Mikami and K. Tanabe, *J. Am. Chem. Soc.*, 2000, **122**, 3746.
30 J. A. Dean, *Lange's Handbook of Chemistry*, 11th edition, McGraw-Hill Inc., New York, 1973.
31 The crystal structure of **4** was early resolved with a small unit cell (a = 14.214, b = 16.706, c = 7.019 Å). There are superstructure reflections with the wave vector $q = \pm 0.37c^*$. Since this value is close to 1/3, we refined the structure of **4** with commensurate $\times 3c$ lattice (a = 14.208, b = 16.706, c = 21.054 Å), as shown in Fig. 7. Further modulation of 11 $\times$ c superstructure was also found. The wave vector value 0.37(1) is very close to 4/11(=0.364) within the experimental error. The detail of 11 $\times$ c superstructure will be reported elsewhere.
32 A. Katrusiak, M. Ratajczak-Sitarz and E. Grach, *J. Mol. Struct.*, 1999, **474**, 135.
33 A. Katrusiak and M. Szafrański, *Phys. Rev. Lett.*, 1999, **82**, 576.
34 L. N. Kuleshova and P. M. Zorkii, *Acta Crystallogr., Sect. B*, 1981, **B37**, 1363.
35 D. H. Saunder, *Proc. R. Soc. London A*, 1947, **190**, 508.
36 G. Saito and Y. Matsunaga, *Bull. Chem. Soc. Jpn.*, 1973, **46**, 714.
37 G. Saito and T. Inukai, *Nihon Kesshoseicho Gakkaishi1*, 1989, **6**, 2 (in Japanese).
38 S. I. Bailer, I. M. Ritchie and F. R. Hwegill, *J. Chem. Soc., Perkin Trans. 2*, 1983, 645.
39 T. Akutagawa, G. Saito, M. Kusunoki and K. Sakaguchi, *Bull. Chem. Soc. Jpn.*, 1996, **69**, 2487.
40 T. Akutagawa, PhD thesis, 1996, Kyoto University.
41 G. Saito and A. K. Colter, *Tetrahedron Lett.*, 1977, **38**, 3325; A. K. Colter, P. Plank, J. P. Bergsma, R. Lahti, A. A. Quesnel and A. G. Parsons, *Can. J. Chem.*, 1984, **62**, 1780.
42 L. R. Melby, R. J. Harder, W. R. Hertler, W. Mahler, R. E. Benson and W. E. Mochel, *J. Am. Chem. Soc.*, 1962, **84**, 3374.
43 S. G. Clarkson, B. C. Lane and F. Basolo, *Inorg. Chem.*, 1972, **11**, 662; A. R. Siedle, G. A. Candela and T. F. Finnegan, *Inorg. Chim. Acta*, 1979, **35**, 125.
44 J.-M. Lehn, *Supramolecular chemistry*, VCH, Weinheim, 1995.
45 Md. B.Zaman, M. Tomura and Y. Yamashita, *Org. Lett.*, 2000, **2**, 273; Md. B. Zaman, M. Tomura and Y. Yamashita, *J. Org. Chem.*, 2001, **66**, 5987; H. Yamochi, S. Nakamura, G. Saito, Md. B. Zaman, J. Toyoda, Y. Morita and K. Nakasuji, *Synth. Met.*, 1999, **102**, 1729; Md. B. Zaman, J. Toyoda, Y. Morita, S. Nakamura, H. Yamochi, G. Saito, K. Nishimura, N. Yoneyama, T. Enoki and K. Nakasuji, *J. Mater. Chem.*, 2001, **11**, 2211.
46 G. R. Desiraju, *Angew. Chem., Int. Ed. Engl.*, 1995, **34**, 2311.